Rotary Paddle Level Switch

RD

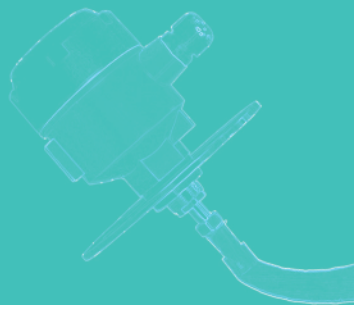

BONT Technologies

Rotary paddle level switch utilizes micro motor as drive device, transmission shaft contact with clutch. When it does not contact with material, the motor runs normally; when the blade contacts with material, the motor stops running; testing device outputs a contact signal and cuts the power and it stops rotary in the meantime. The pressure to blade is disappear when the material gradually fall down, and the testing device recovered to the original state by torsion spring. Torsion could be regulated according to different gravity of material. RD series of rotary paddle level switch specially used for detecting material level of warehouse, vessel and tank. The material level switch can prevent warehouse flooding, tank jam and warehouse empty so as to reduce flooding, material waste and standby time. Rotary paddle level switch is also other solid matter rotary paddle level switch can eliminate the normal fault of common rotary paddle level switch. When adding material, it would not go to stop though the motor stops by cutting power. This can reduce fraction, operating temperature and extend the lifetime of motor. The switch contains little moving parts, three sets of drive bearing and sealed, lubricated driving gear assembly. That is why the RD series of rotary paddle level switch gains reliable control force in the market.

Product series

RD-10

RD-11T

RD-11F

RD-80-AM

RD-20

RD-40

Operation principle

Rotary paddle level switch utilizes micro motor as drive device, transmission shaft contact with clutch. When it does not contact with material, the motor runs normally; when the blade contact with material, the motor stops running; testing device outputs a contact signal and cuts the power and it stops rotary in the meantime. The pressure to blade disappears when the material gradually fall down, and the testing device recovered to the original state by torsional spring.

Place of use

Suitable to be applied in chemistry, pharmacy, fodder, cement,food and metallurgical industry.

Product features

1. The motor imported motor has reliable performance which is able to run for long time;
2. Special design of sealed oil can prevent powder dust enter along with the axis;
3. Torsion is stable and reliable, also could be regulated;
4. When the blade bears too much load, motor turning system will skid automatically to prevent from damage;
5. Contact specification, blade, length could be custom made.

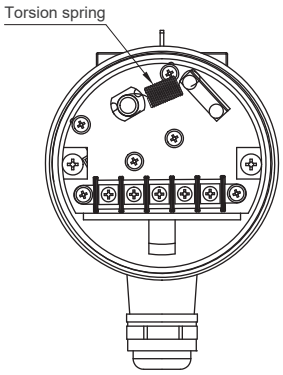

Electrical parameter

Large type

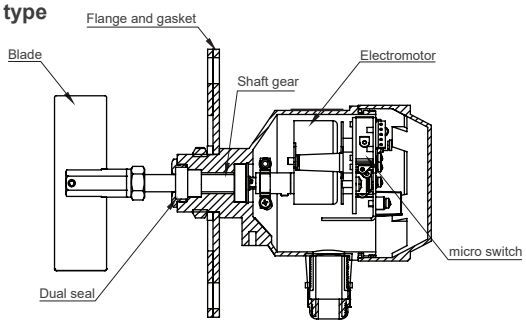

Small type

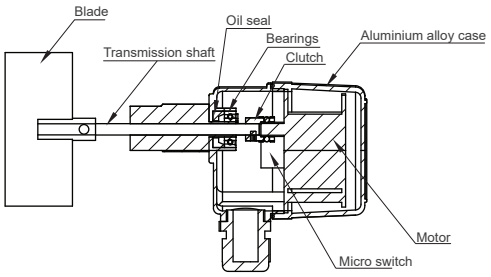

Power supply	220VAC/110VAC/24VDC	Power supply	220VAC/110VAC/24VDC
Contact rating	5A/250VAC,SPDT	Contact rating	5A/250VAC,SPDT
Power	5W	Power	5W
Protection level	IP65	Protection level	IP65
Suitable smallest density	0.5g/cm³	Suitable smallest density	0.5g/cm³

Product size and parameter (reference)

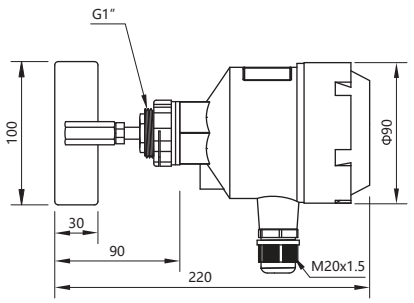

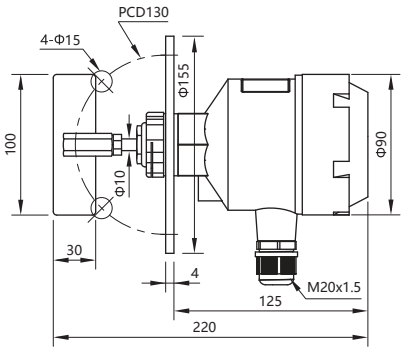

Model	RD-10 thread type	Model	RD-11 flange type
Voltage using	220VAC	Voltage using	220VAC
Power	3W	Power	3W
Contact rating	SPDT 5A/250VAC	Contact rating	SPDT 5A/250VAC
Process connecting	G1" thread(customized)	Process connecting	2-1/2"×5kg" flange(customized)
Rotor speed	1RPM	Rotor speed	1RPM
Moment of force	0.5~1kg-cm	Moment of force	0.5~1kg-cm
Voltage resistance	1500VAC×1min	Voltage resistance	1500VAC×1min
Suitable density	≥ 0.4g/cm³	Suitable density	≥ 0.4g/cm³
Temperature	-20~80℃	Temperature	-20~80℃
Electrical specification	M20×1.5	Electrical specification	M20×1.5
Junction box	aluminium alloy junction box	Junction box	aluminium alloy junction box
Protection level	IP65	Protection level	IP65
Way to install	vertical or horizontal	Way to install	vertical or horizontal

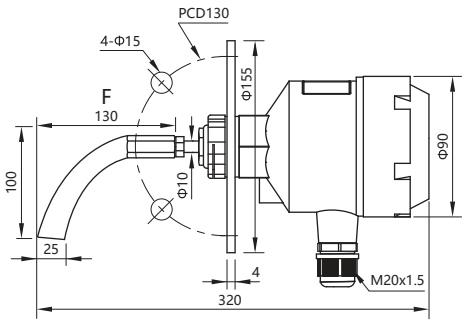

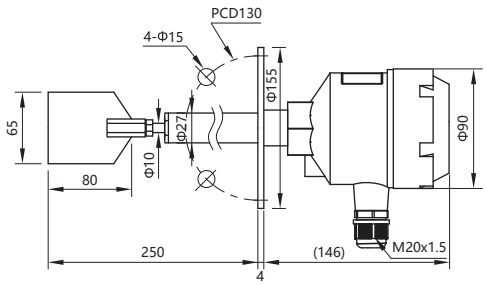

Model	RD-11F flange sickle type	Model	RD-20 axis protection type
Voltage using	220VAC	Voltage using	220VAC
Power	3W	Power	3W
Contact rating	SPDT 5A/250VAC	Contact rating	SPDT 5A/250VAC
Process connecting	2-1/2"×5kg flange(customized)	Process connecting	2-1/2"×5kg flange(customized)
Rotor speed	1RPM	Rotor speed	1RPM
Moment of force	0.5~1kg-cm	Moment of force	0.5~1kg-cm
Voltage resistance	1500VAC×1min	Voltage resistance	1500VAC×1min
Suitable density	≥ 0.4g/cm³	Suitable density	≥ 0.4g/cm³
Temperature	-20~80℃	Temperature	-20~80℃
Electrical specification	M20×1.5	Electrical specification	M20×1.5
Junction box	aluminium alloy junction box	Junction box	aluminium alloy junction box
Protection level	IP65	Protection level	IP65
Way to install	vertical or horizontal	Way to install	vertical or horizontal

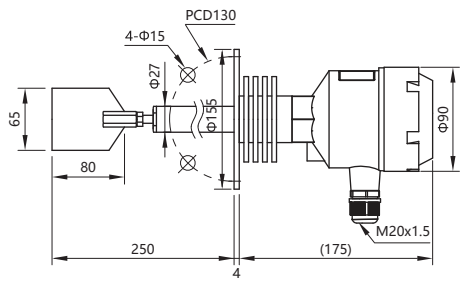

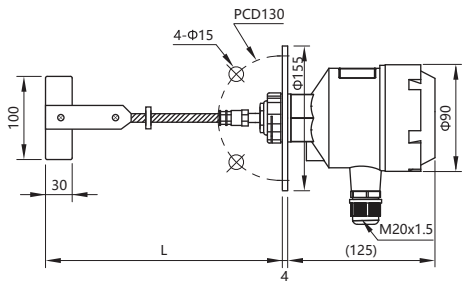

Model	RD-20T high temperature axis protection type
Voltage using	220VAC
Power	3W
Contact rating	SPDT 5A/250VAC
Process connecting	2-1/2"×5kg flange(customized)
Rotor speed	1RPM
Moment of force	0.5~1kg-cm
Voltage resistance	1500VAC×1min
Suitable density	≥ 0.4g/cm³
Temperature	-20~200℃(max is 350℃)
Electrical specification	M20×1.5
Junction box	aluminium alloy junction box
Protection level	IP65
Way to install	vertical or horizontal

Model	RD-30 steel rope type
Voltage using	220VAC
Power	3W
Contact rating	SPDT 5A/250VAC
Process connecting	2-1/2"×5kg flange(customized)
Rotor speed	1RPM
Moment of force	0.5~1kg-cm
Voltage resistance	1500VAC×1min
Suitable density	≥ 0.4g/cm³
Temperature	-20~80℃
Electrical specification	M20×1.5
Junction box	aluminium alloy junction box
Protection level	IP65
Way to install	vertical

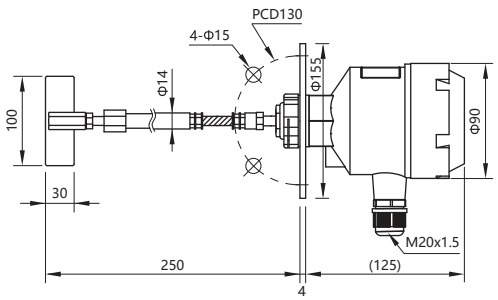

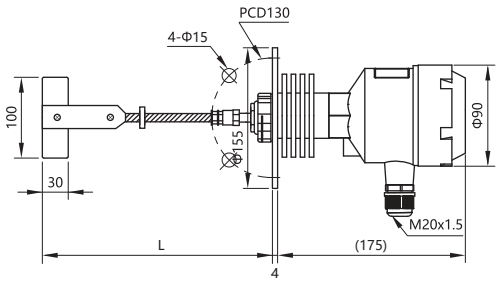

Model	RD-40 adjusted axis type
Voltage using	220VAC
Power	3W
Contact rating	SPDT 5A/250VAC
Process connecting	2-1/2"×5kg flange(customized)
Rotor speed	1RPM
Moment of force	0.5~1kg-cm
Voltage resistance	1500VAC×1min
Suitable density	≥ 0.4g/cm³
Temperature	-20~80℃
Electrical specification	M20×1.5
Junction box	aluminium alloy junction box
Protection level	IP65
Way to install	vertical

Model	RD-30T high temperature steel rope
Voltage using	220VAC
Power	3W
Contact rating	SPDT 5A/250VAC
Process connecting	2-1/2"×5kg flange(customized)
Rotor speed	1RPM
Moment of force	0.5~1kg-cm
Voltage resistance	1500VAC×1min
Suitable density	≥ 0.4g/cm³
Temperature	-20~200℃(max is 350℃)
Electrical specification	M20×1.5
Junction box	aluminium alloy junction box
Protection level	IP65
Way to install	vertical

Installation instruction

- As below picture, rotary paddle switch should not be installed under the blanking mouth, if it is unavoidable, a protection plate should be installed above the blade, in case the blade is damaged and caused wrong action by materials.
- In case the outdoor water and rain water get into junction box, the electrical entry should be vertically installed and downward when it is installed horizontally. Cable retaining nuts should be locked tight and consider to install apprentice if possible.
- If feeling holes is smaller than the width of blade, blade could be removed and reassembled, and coating with thread-locking fluid before assembling, in case the blade is falling apart while working.
- Make sure the power voltage is the same as it displays on marking of switch.
- Please make sure the way of installation is vertical or horizontal.

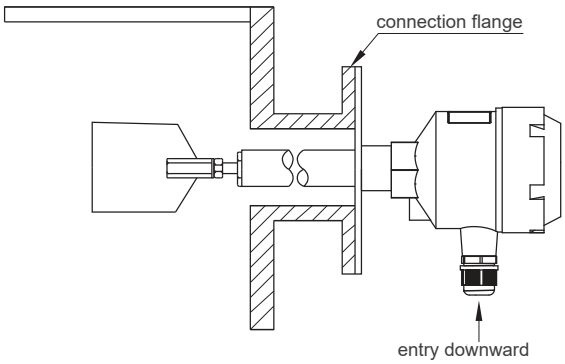

Connection flange

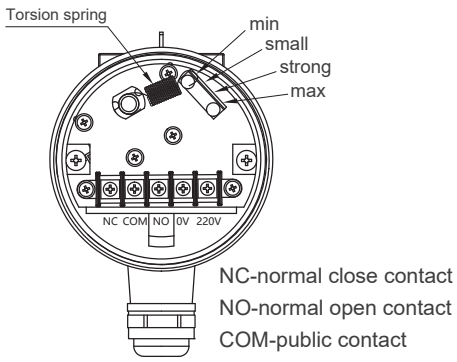

Connection diagram

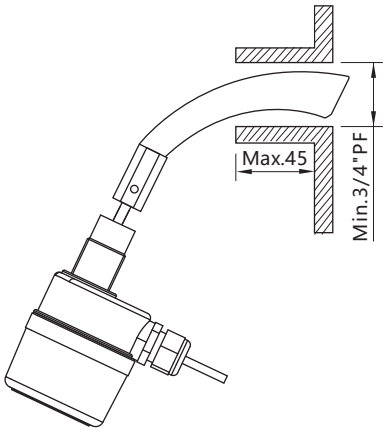

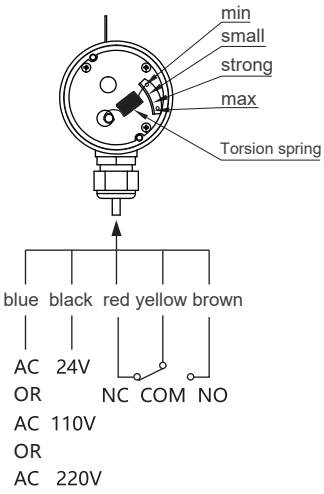

Selection tables

Rotary paddle level switch

10: Thread type; **11**:Flange type **20**:Axis protection type **30**:Steel rope type **40**:Adjustable axis type **80**:Mini small type

Flange/thread size

C:3/4"(20A)	**I :**4"(100A)
D:1"(25A)	**J:**5"(1250A)
E:1-1/2"(40A)	**K:**6"(150A)
F:2"(50A)	**S:**Special size
G:2-1/2"(65A)	**3:1-1/4"**（32A）
H:3"(80A)	

Flange/thread specification

L:5kg/cm²	**U:**PN0.6(6Bar)
M:10kg/cm²	**V:**PN1.0(10Bar)
N:150Lbs	**W:**PN1.6(16Bar)
O:300Lbs	**X:**PN2.5(25Bar)
P:PT	**Y:**PN4.0(40Bbar)
Q:PF	**Z:**PN6.3(63Bar)
F:NPT	**S:**Special size
T:GAS	

T: -30~200℃; **H**: -30~350℃; This vacancy indicates normal temperature type

D: 24VDC; **A**: 220VAC; **B**: 110VAC; **C**: 24VAC

S:Standard junction box; **E**:Explosion-proof junction box

A:T type blade; **B/C/D:**Square type blade; **E:**L type blade
F:Sickle type; **G:**Cross blade; **H:**Arc blade (width 22)
(refer to blade selection table below)

unit(mm)

Product series	Structure	Process connection	Temperature range	Power	Explosion proof type selection	Blade type	Insertion depth
RD	-□□	□□	□	□	□	□	-□□□□

SELECTION TABLE
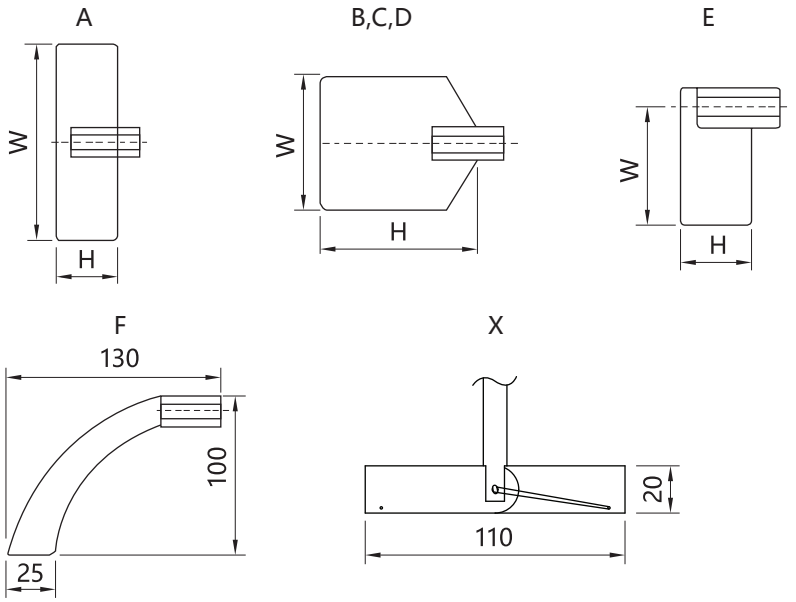
A: 100×30（W×H）
B: 65×80（W×H）
C: 65×120（W×H）
D: 80×80（W×H）
E: 50×30（W×H）
F: sickle type
X: scissor type